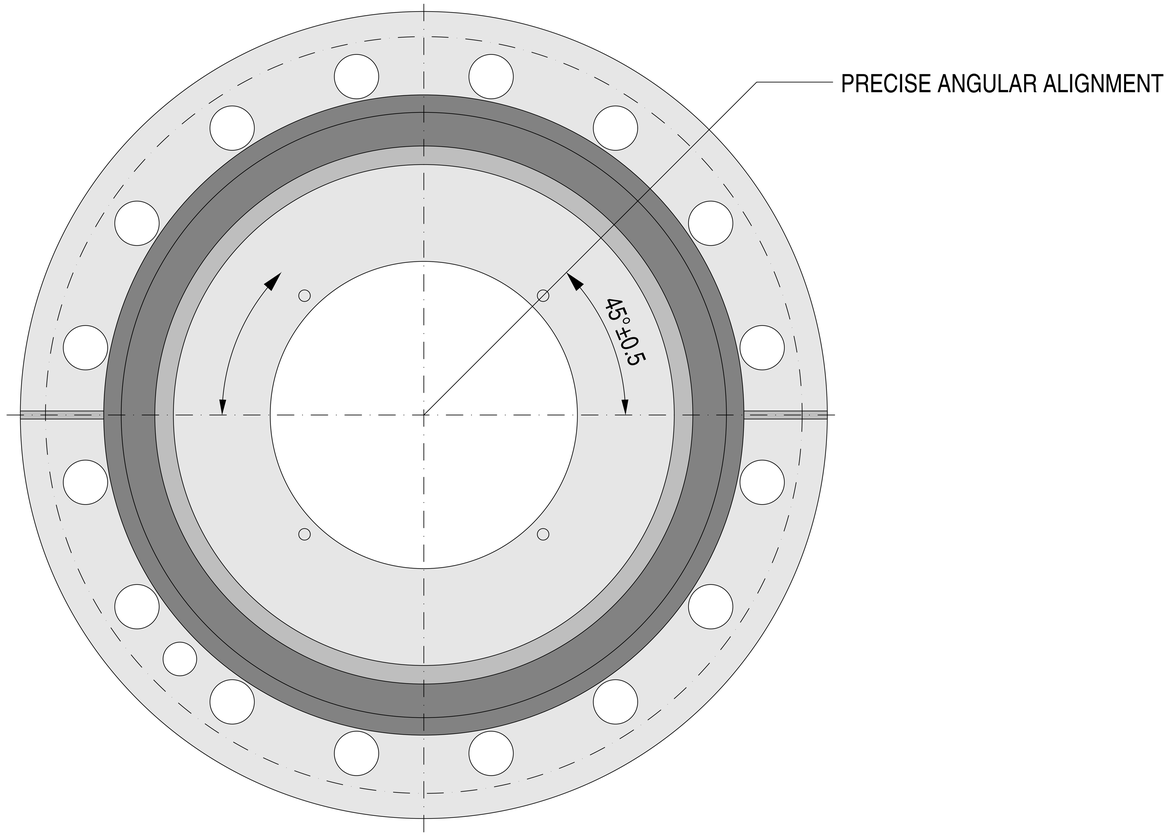
PRECISE ANGULAR ALIGNMENT
45°±0.5

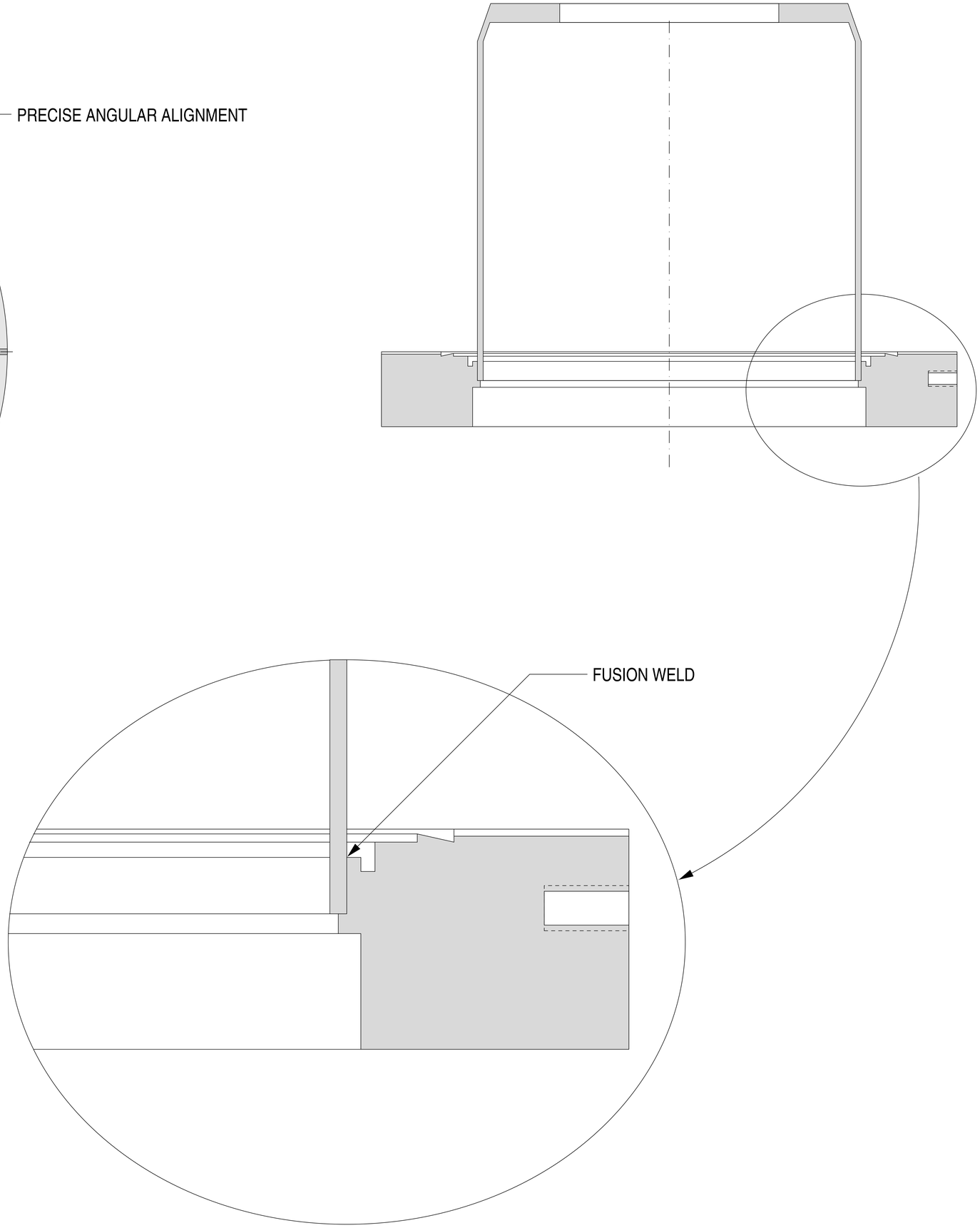
FUSION WELD